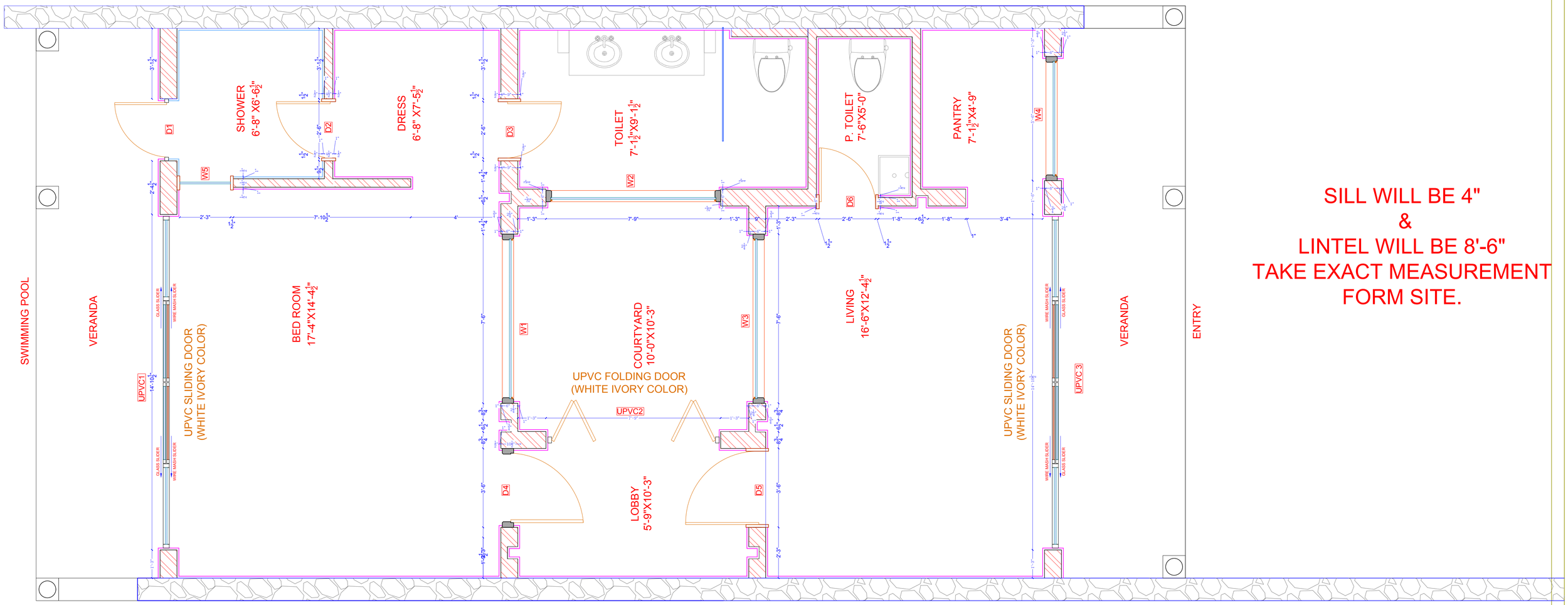

SILL WILL BE 4"
&
LINTEL WILL BE 8'-6"
TAKE EXACT MEASUREMENT
FORM SITE.

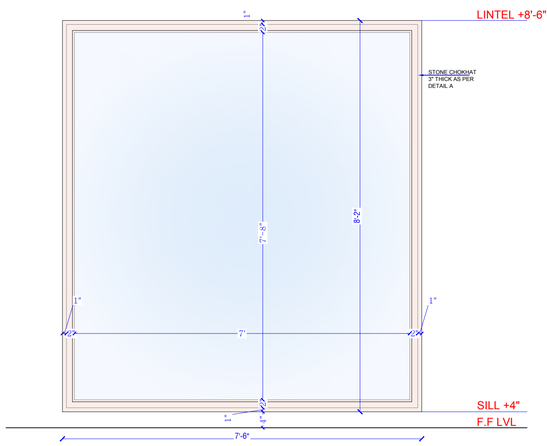

W1
WINDOW 1

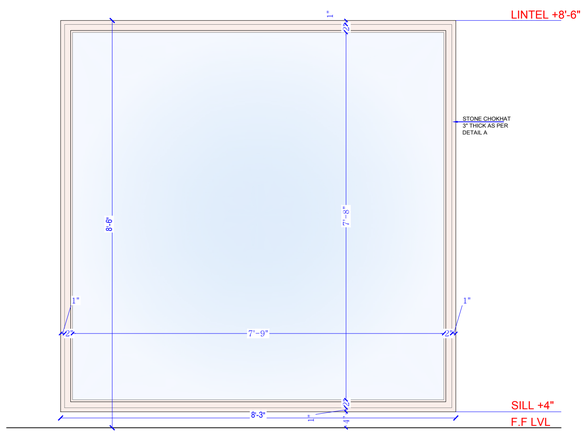

W2
WINDOW 2

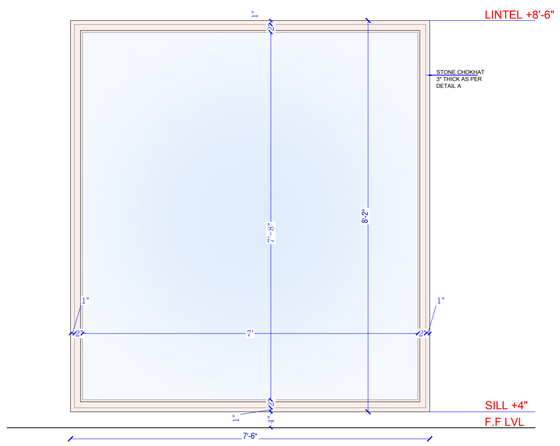

W3
WINDOW 3

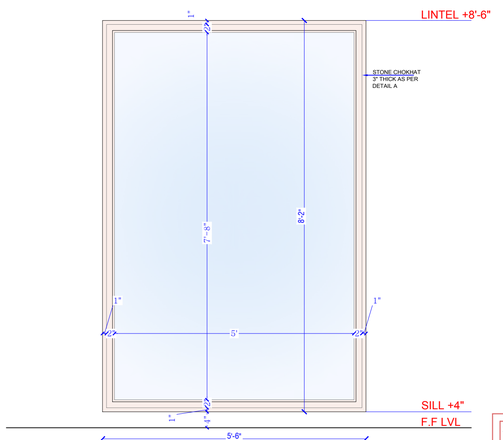

W4
WINDOW 4

W1
WINDOW 1
10MM THICK
TUFFERN GLASS

10MM THICK
TUFFERN GLASS

W3
WINDOW 3
10MM THICK
TUFFERN GLASS

W4
D.G.U FIXED GLASS
WINDOW

ARCHITECT:
NEERAV GUPTA
CA/2009/44766
L-1, KRISHNA MARG, C- SCHEME,
JAIPUR (302001), RAJASTHAN.PH.0141-2360825
E-Mail:architect_neeravgupta@yahoo.com

PROJECT:
CLARKS FARMHOUSE

DRAWING TITLE:
WINDOW SCHEDULE

DRAWN BY: RISHABH	SCALE: N.T.S	DATE: 4-07-2019
CHECKED BY: NEERAV GUPTA	DRAWING NO.:	

NOTES:
THE COPYRIGHT AND PROPERTY OF THIS DESIGN AND DRAWING BELONGS TO **RAVI KUMAR GUPTA**. IT MUST NOT BE COPIED OR REPRODUCED IN ANY MANNER WITHOUT THEIR WRITTEN CONSENT. ANY ILLEGAL USE OF THIS DESIGN AS PER LAW MAY BE INITIATED AGAINST THE OFFENDER.