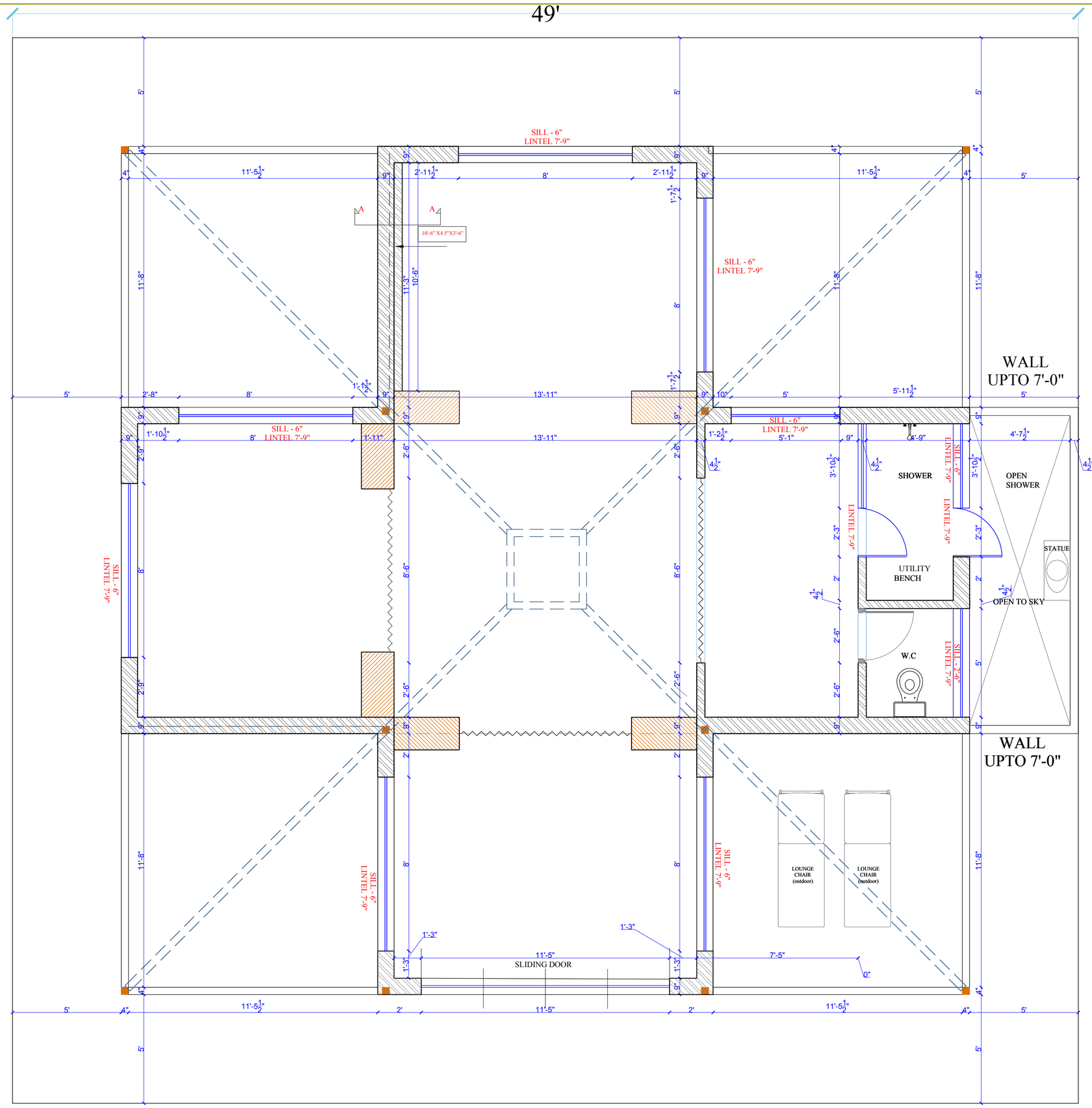

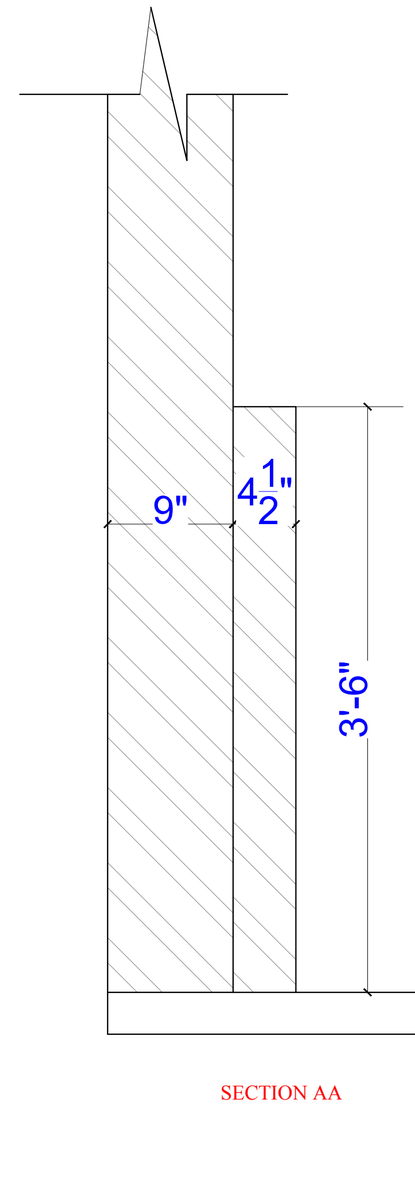

SECTION AA

ARCHITECT:
NEERAV GUPTA
CA/2009/44766
L-1, KRISHNA MARG, C- SCHEME,
JAIPUR (302001), RAJASTHAN,Ph.0141-2360825
E-Mail-architect_neeravgupta@yahoo.com

PROJECT:
CLARKS RESORT JAWAI

DRAWING TITLE:
WORKING
DRAWING OF TENT

DRAWN BY:	SCALE:	DATE:
DEEPIKA	N.T.S	28-05-2019
CHECKED BY: NEERAV GUPTA	DRAWING NO.: **CL/ST/A/06**	

NOTES:
THE COPYRIGHT AND PROPERTY OF THIS DESIGN AND DRAWING BELONGS TO **RAVI KUMAR GUPTA**. IT MUST NOT BE COPIED OR REPRODUCED IN ANY FORM WITHOUT THE WRITTEN CONSENT. A LEGAL ACTION AS PER LAW MAY BE INITIATED AGAINST THE OFFENDER.